MOUNTING SPECIFICATIONS

DLS MODELS:

DLS-15

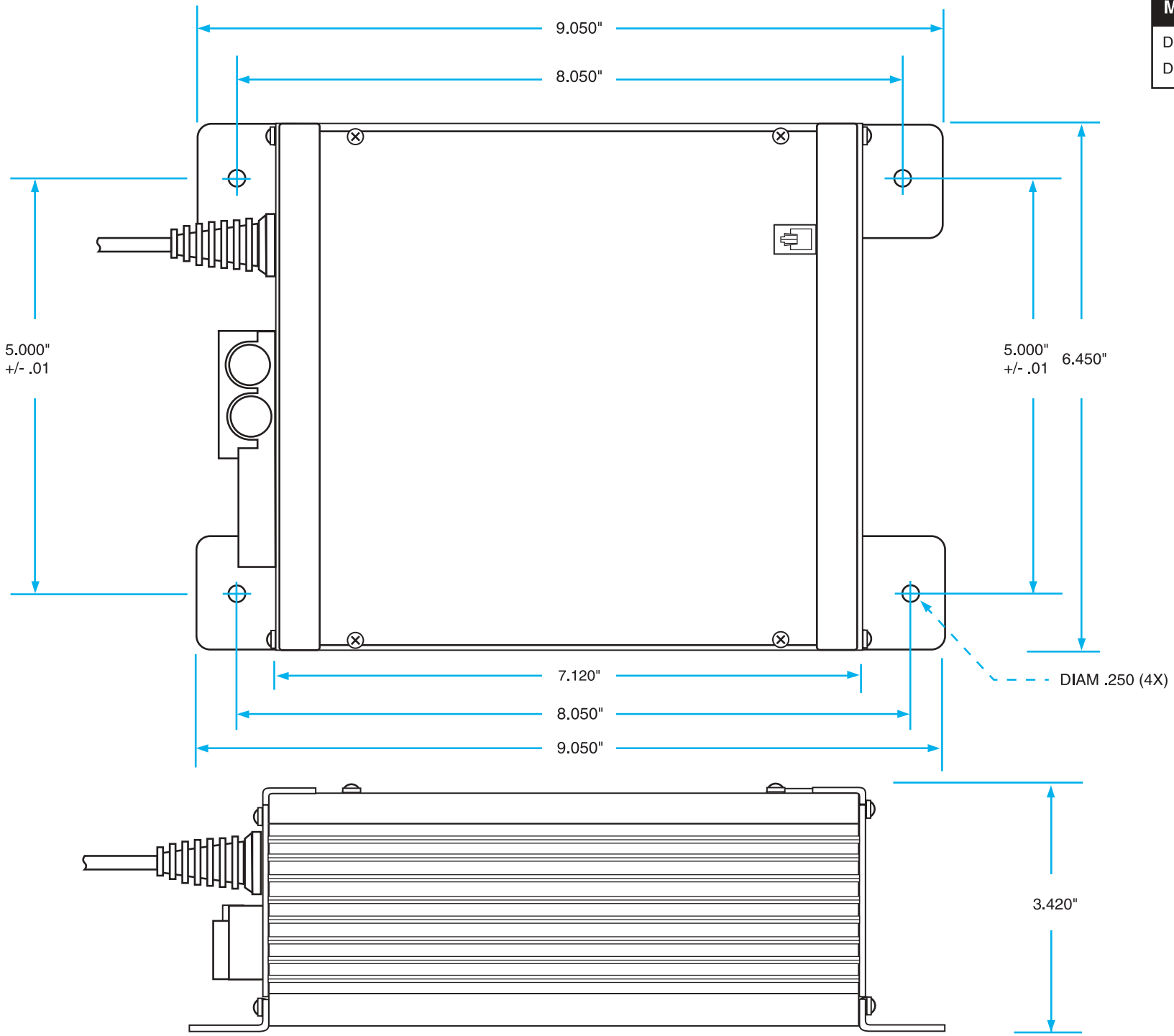

IOTA ENGINEERING

P.O. BOX 11846 TUCSON, AZ 85734

(520) 294-3292 · FAX (520) 741-2837

www.iotaengineering.com